Tolerance	
coasting	Fabricaton
Foam puya	ISO 2768(c)

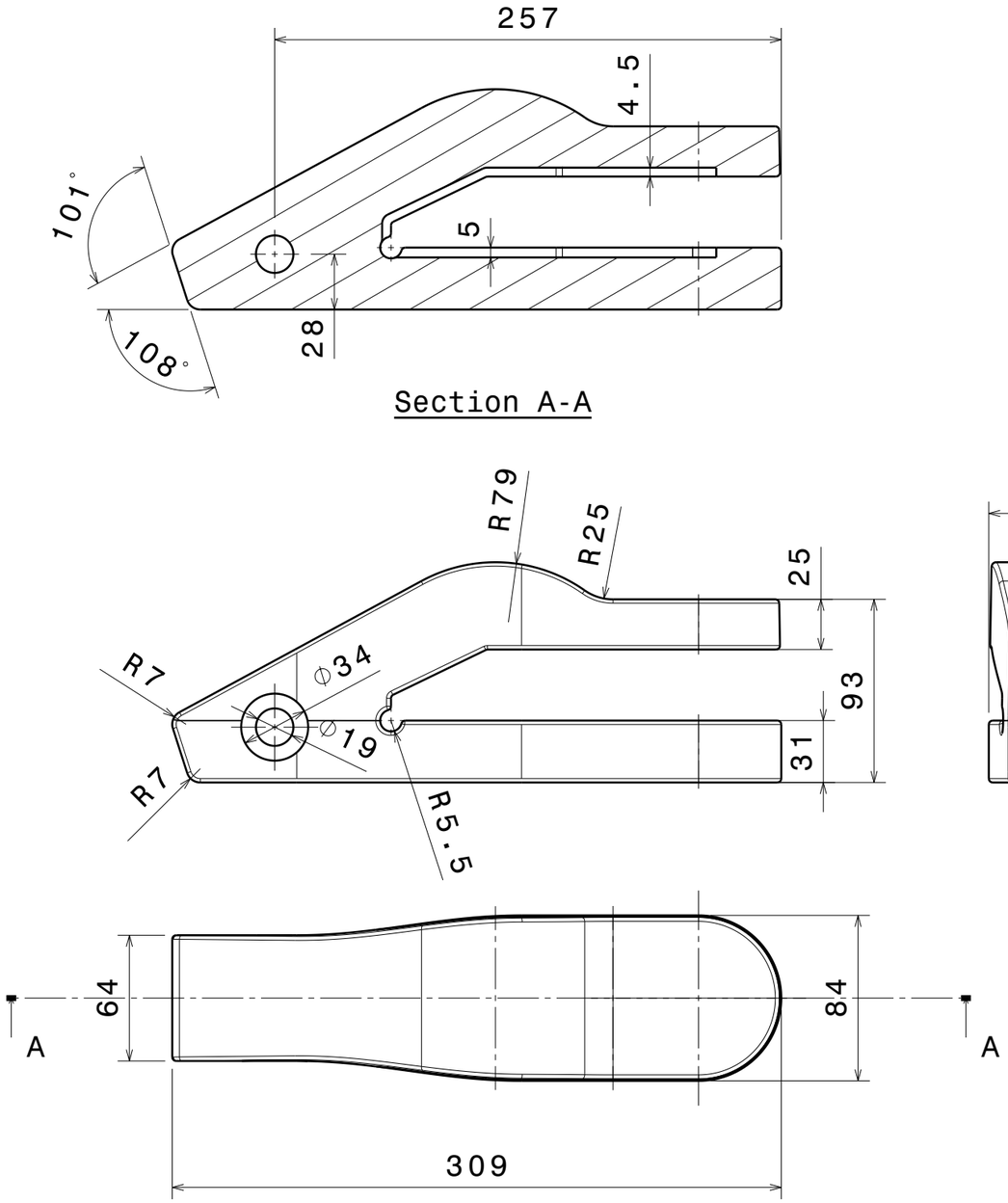

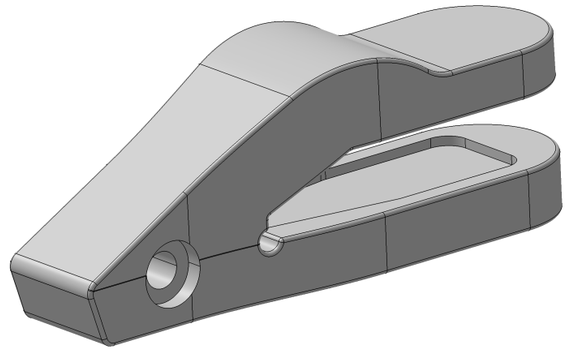

Isometric

Surface Qualities (DIN 4766 T2)										
Zarrin kupal Puya No.	10	9	8	7	6	5	4	3	2	1
Micron Ra	25	12.5	6.3	3.2	1.6	0.8	0.4	0.2	0.1	0.05
Machining Symbols	—	~	▽	▽▽		▽▽▽				

Rev.	Modification	Date	Drawn	Checked	Appr.
0	General Revision	95.5.27	M.Absalan	E.Froozan	

POOLAD FOAM PUYA Co.

Sheet 1 of 1

Project : Fork

All Dimensions are in mm

Prototype	E.Froozan		Title:
Drawn	M.Absalan		
Check	K.Salekfard		
Appr.	H.Sorkhabi		
Scale: N.T.S	Material: See part list	Weight Kg: See part list	Drawing No:(A3) — Rev. 0

This drawing is our property.It can't be reproduced or communicated without our written agreement.